NanoSpeed™ Fiber Optical Switch Array

(SM, PM, Bidirectional)

DATASHEET

BUY NOW

The NS fiber optical switch array cascades multiple 1x2 or 2x2 switches to redirect an incoming optical signal among N output optical fibers rapidly controlled. It mounts multiple switches on a PCB controlled by a TTL input signal via a single SMC connector. This array is designed as a compact OEM module. The all-solid-state crystal design provides exceptionally high reliability. The switch has passed Telcordia reliability qualification tests and is used in space applications. It is designed to meet the most demanding ultra-high reliability requirements, fast response time, and continuous operation. The unit comes with a wall plug-in power supply. Available with several electronic drivers having performance optimized for various repetition rates. No GUI is available due to high speed. The switch is intrinsically bidirectional and selectable for polarization-independent or polarization-maintain by the fiber type.

The rise/fall time is intrinsically related to the crystal properties, and the repetition rate is associated with the driver. There are poor frequency response sections due to the device resonances. The NS devices are shipped mounted on a tuned driver.

The NS series switches respond to a control signal with any arbitrary timing with frequency from DC up to MHz. The switch is usually mounted on a tuned driver before shipping. The electrical power consumption is related to the repetition rate at which the switch is operated.

The dual-stage configuration increases the extinction ratio or cross-talk value.

Features

- High Speed
- High Reliability
- Low Loss
- Compact

Applications

- Instrumentation
- Power balance
- Sensor

Specifications

Parameter		Min	Typical	Max	Unit
Central Wavelength		450		2000	nm
Insertion Loss [1]	1260~1650nm		0.6	1	dB
	900~1260nm		0.8	1.3	dB
	760~900nm		1	1.6	dB
	650~850nm		1.5	2.2	dB
	450~580nm		2	2.8	dB
Cross Talk [2]		18	25	35	dB
Durability		10^{14}			cycles
Optical Response (Rise, Fall) [3]		50		100	ns
Repetition Rate		DC	20	300	kHz
Polarization Dependent Loss			0.1	0.35	dB
IL Temperature Dependency			0.25	0.5	dB
Polarization Mode Dispersion			0.1	0.2	Ps
Return Loss		45	50	60	dB
Operating Temperature		-5		70	°C
Optical Power Handling [4]			0.3	20	W
Storage Temperature		-40		85	°C
Package Dimension		See mechanical dimension			mm

Notes:

[1] Excluding connectors.

[2] ±25nm, Cross talk is measured at 5kHz, which may be degraded at the high repeat rate.

[3] The rise/fall time does not include electrical signal delay

[4] Defined at 1310/1550nm. For the shorter wavelength, the handling power may be reduced.

Warning: **This is an OEM module designed for system integration. Do not touch the PCB by hand. The electrical static can kill the chips even without a power plug-in. Unpleasant electrical shock may also be felt. For laboratory use, please buy a Turnkey system.**

Rev 03/08/24

NanoSpeed™ Fiber Optical Switch Array

(SM, PM, Bidirectional)

DATASHEET

Mechanical Dimensions (mm)

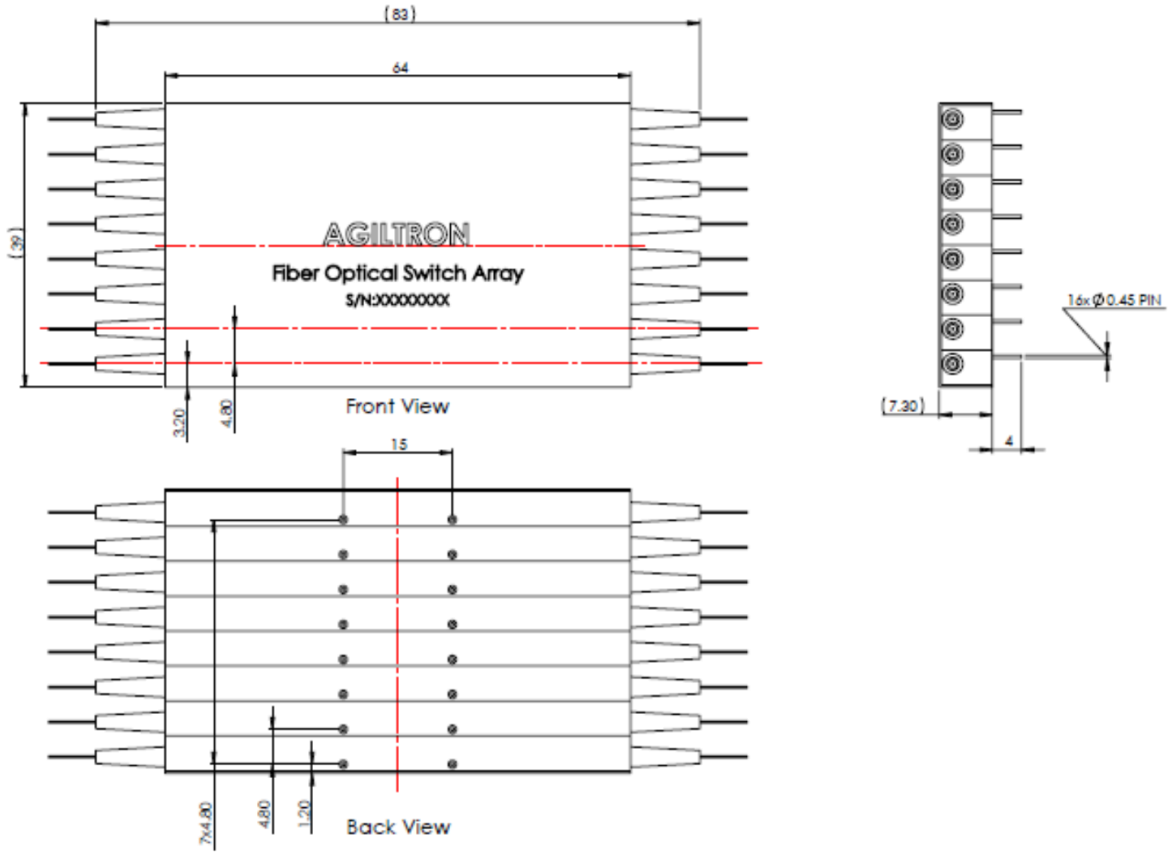

*Product dimensions may change without notice. This is sometimes required for non-standard specifications.

Typical Speed Response Measurement

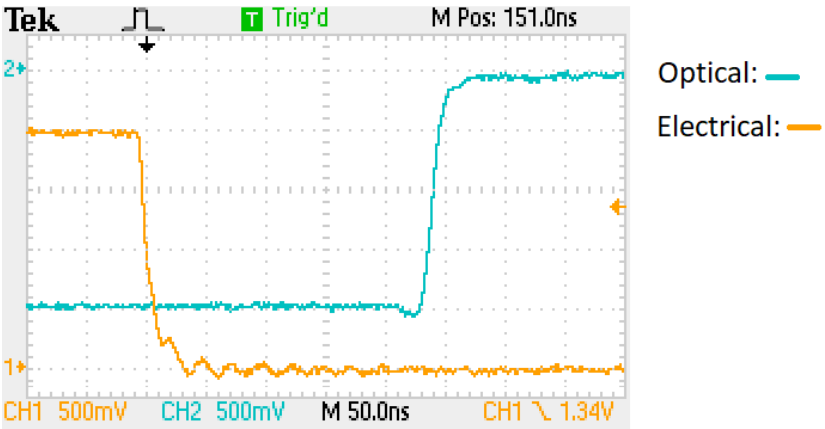

NanoSpeed™ Fiber Optical Switch Array

(SM, PM, Bidirectional)

DATASHEET

Ordering Information

	☐	☐☐	☐	☐	☐	☐	☐	☐	☐
Prefix	**Type**	**Channel**	**Wavelength**	**Repetition/Rise Time**	**Fiber Type**	**Fiber Cover**	**Fiber Length**	**Connector**	**Optical Power**
NSAS-	1x2 = 1 2x2 = 2 1x2mini = 4 2x2mini = 8	4 = 04 8 = 08 12 = 12	1060 = 1 2000 = 2 1310 = 3 1480 = 4 1550 = 5 1625 = 6 780 = 7 850 = 8 650 = E 550 = F 400 = G 1565~1620 = L Special = 0	50kHz (100ns) = 1 100kHz(100ns) = 2 300kHz (100ns) = 3	SMF-28 = 1 HI1060 = 2 HI780 = 3 PM1550 = 5 PM850 = 8 PM980 = 9 Special = 0	Bare fiber = 1 900um tube = 3 Special = 0	0.25m = 1 0.5m = 2 1.0 m = 3 Special = 0	None = 1 FC/PC = 2 FC/APC = 3 SC/PC = 4 SC/APC = 5 ST/PC = 6 LC/PC = 7 Duplex LC/PC = 8 LC/APC = 9 E2000 APC = A LC/UPC = U Special = 0	Regular = 1 1W = A 2W = B 5W = C 10W = D 20W = E

NOTE:

- **PM1550** fiber works well for **1310nm**

Fiber Core Alignment

Note that the minimum attenuation for these devices depends on excellent core-to-core alignment when the connectors are mated. This is crucial for shorter wavelengths with smaller fiber core diameters that can increase the loss of many decibels above the specification if they are not perfectly aligned. Different vendors' connectors may not mate well with each other, especially for angled APC.

Fiber Cleanliness

Fibers with smaller core diameters (<5 µm) must be kept extremely clean, contamination at fiber-fiber interfaces, combined with the high optical power density, can lead to significant optical damage. This type of damage usually requires re-polishing or replacement of the connector.

Maximum Optical Input Power

Due to their small fiber core diameters for short wavelength and high photon energies, the damage thresholds for device is substantially reduced than the common 1550nm fiber. To avoid damage to the exposed fiber end faces and internal components, the optical input power should never exceed 20 mW for wavelengths shorter 650nm. We produce a special version to increase the how handling by expanding the core side at the fiber ends.

Optical Power Handling vs Wavelength For Single-Mode Fibers

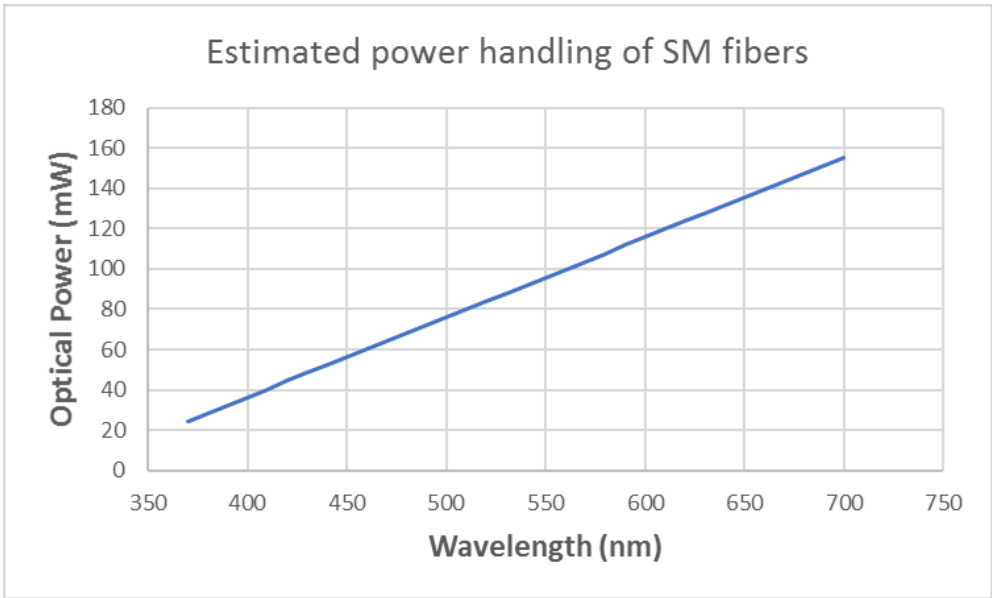

Wavelength Dependence of CT

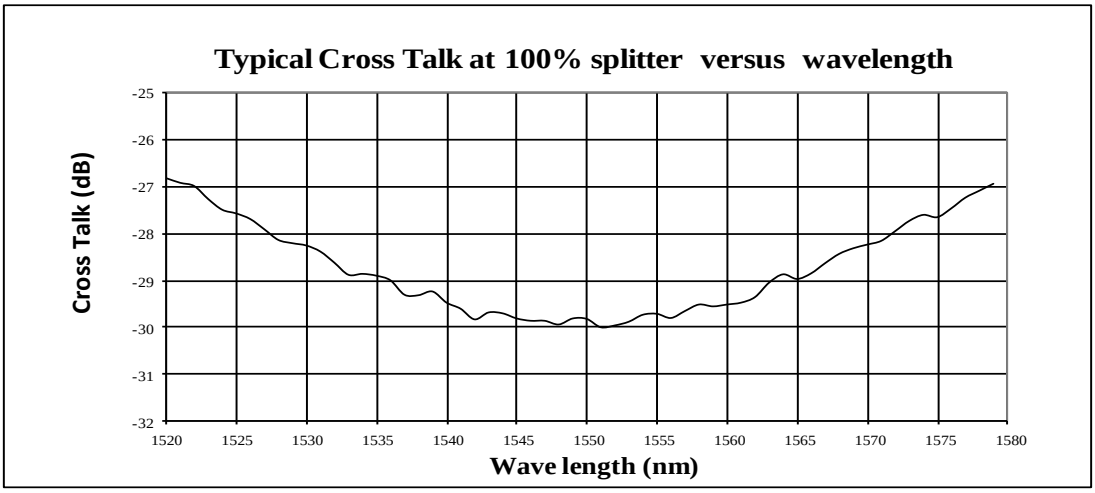

NanoSpeed™ Fiber Optical Switch Array

(SM, PM, Bidirectional)

DATASHEET

Q & A

Q: Does NS device drift over time and temperature?
A: NS devices are based on electro-optical crystal materials that can be influenced to a certain range by the environmental variations. The insertion loss of the device is only affected by the thermal expansion induced miss-alignment. For extended temperature operation, we offer special packaging to -40 -100 ^{0}C. The extinction or cross-talk value is affected by many EO material characters, including temperature-dependent birefringence, Vp, temperature gradient, optical power, at resonance points (electronic). However, the devices are designed to meet the minimum extinction/cross-talk stated on the spec sheets. It is important to avoid a temperature gradient along the device length.

Q: What is the actual applying voltage on the device?
A: 100 to 400V depending on the version.

Q: How does the device work?
A: NS devices are not based on Mach-Zander Interference, rather birefringence crystal's nature beam displacement, in which the crystal creates two different paths for beams with different polarization orientations.

Q: What is the limitation for faster operation?
A: NS devices have been tested to have an optical response of about 300 ps. However, practical implementation limits the response speeds. It is possible to achieve a much faster response when operated at partial extinction value. We also offer resonance devices over 20MHz with low electrical power consumption.

Operation Manual

1. Connect a control signal to the SMA connector on the PCB.
2. Attach the accompanied power supply (typically a wall-pluggable unit).
3. The device should then function properly.

Note: Do not alter device factory settings.